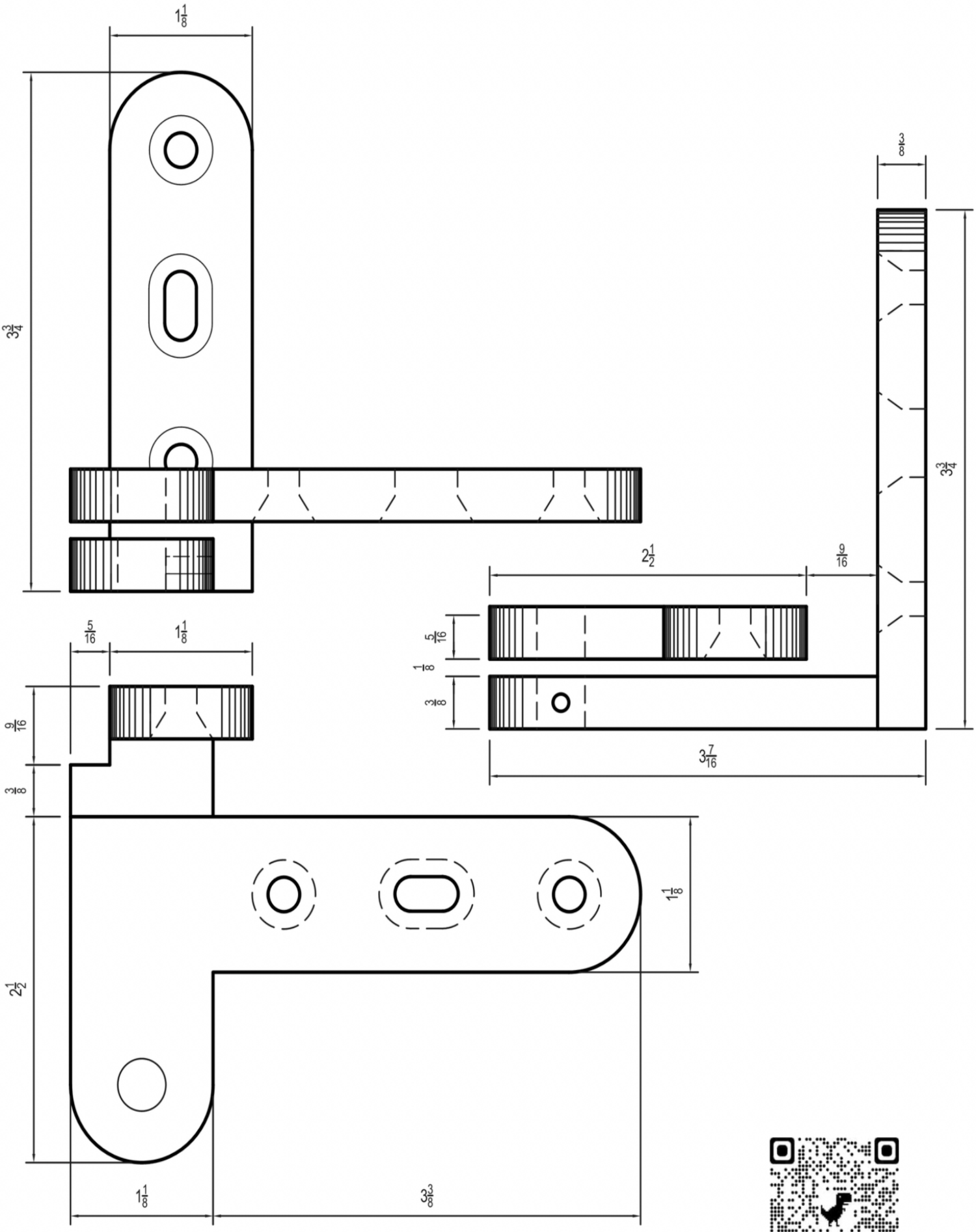

* Full scale drawings

PIVOT

Pivot etc
100-10 91st Avenue, 2nd Floor
Richmond Hill, NY 11418
Phone 718.504.2814 Fax 718.441.8824
www.pivot-etc.com info@pivot-etc.com

Style:	Size:	Door Thickness:	Door Weight:	Screw Size	
4	G	2"	230 lbs.	10	**4G**